SUSPENSION, FRONT CARRIER AND HUB - Z26NEY99A4/B4/A6/B6 (C750914)

2026 RZR - RZR XP S 1000 ULTIMATE (R01) - Z26NEY99A4/B4/A6/B6

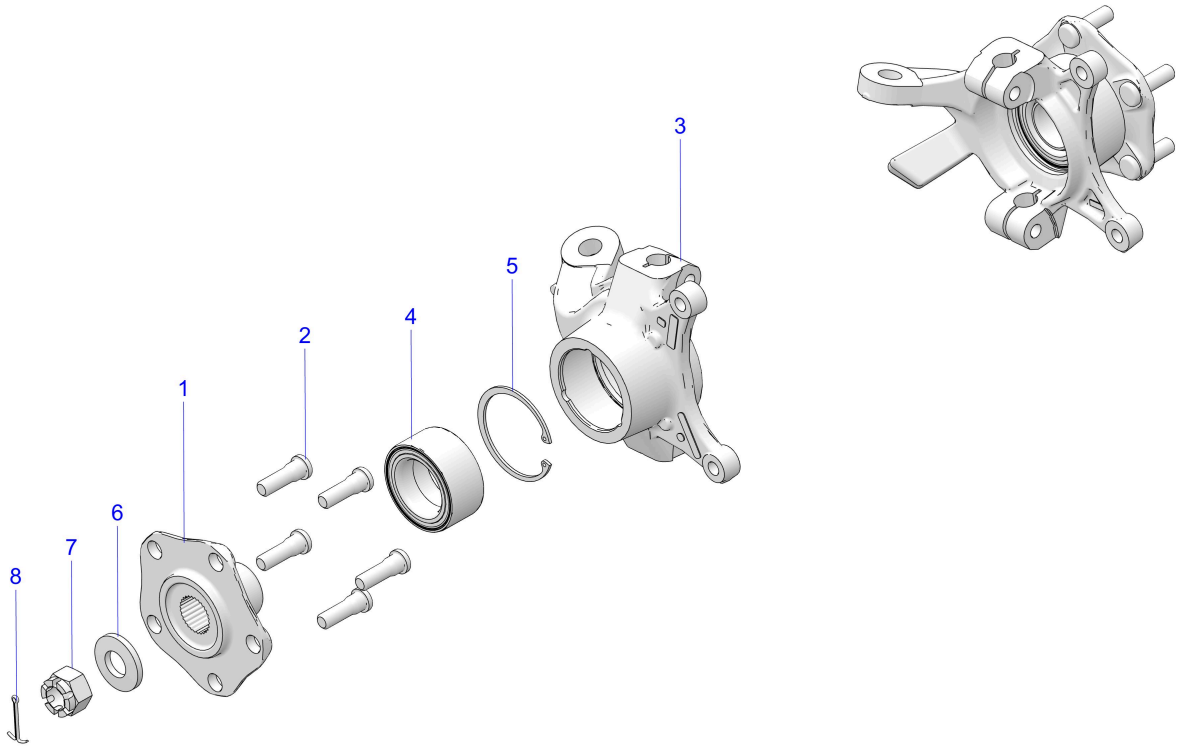

© 2025 Polaris Industries Inc. C750914

Reference #	*Part#*	*Description*	*Quantity*
1	1525112	ASM-WHEEL HUB [INCLUDES 2]	2
1	5143999	HUB-WHEEL(MACH),28T [NO STUDS]	2
2	7519753	STUD-WHEEL,M12-1.5	10
3	1525636	ASM-KNUCKLE BEARING,FRT,LH [INCLUDES 4 & 5]	1
3	5144976	KNUCKLE-FRONT,LH(MACH)	1
3	1525637	ASM-KNUCKLE BEARING,FRT,RH [INCLUDES 4 & 5]	1
3	5144977	KNUCKLE-FRONT,RH(MACH)	1
4	3514924	BEARING-BALL,SEALED,44X72X33.1	1
4	3515090	BEARING-WHEEL,HD,44X72X33.1MM [HD OPTION]	2
5	7710780	RING-RETAINING,2.835,INTERNAL	2
6	7557146	WSHR-LOAD,21X45,5-5.6	2
7	7547949	NUT-CASTLE-M20X1.5 ZFS	2
8	7661404	PIN-COTTER 1/8X1 1/2-Y	2

Copyright 1996-2026 Polaris Industries U.S.A All rights reserved.